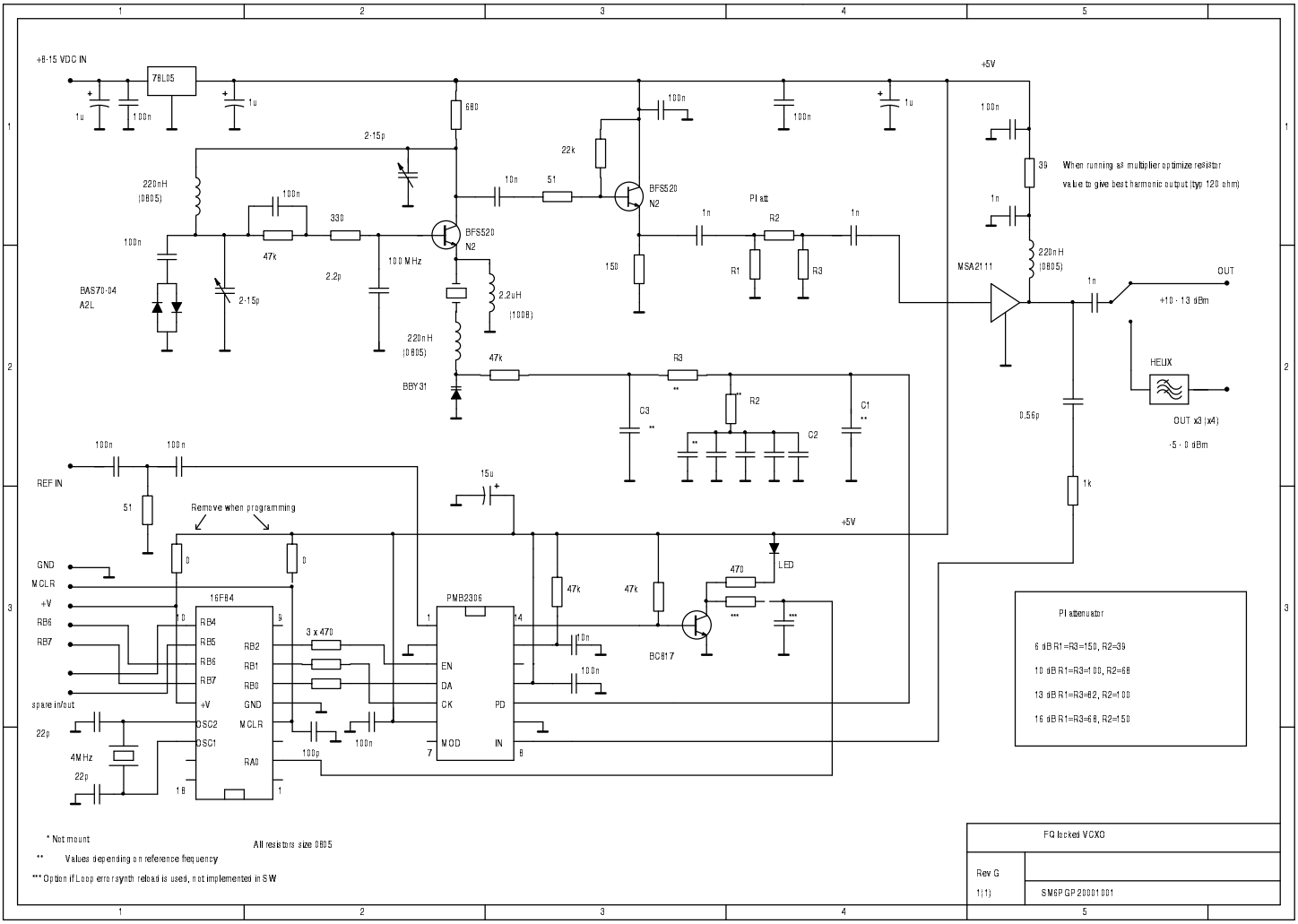
+8-15 VDC IN
79L05
1u
100n
680
2-15p
220nH (0805)
100n
47k
330
2.2p
100 MHz
BAS70-04
A2L
BFS520
N2
10n
51
22k
150
2.2uH (1008)
220nH (0805)
BBY31
47k
R3
C3
R2
C2
C1
+5V
39
When running as multiplier optimize resistor value to give best harmonic output (typ 120 ohm)
PI att
R1
MSA2111
OUT
+10 - 13 dBm
HEUX
OUT x3 (x4)
-5 - 0 dBm
0.56p
1k
REF IN
51
Remove when programming
15u
GND
MCLR
+V
RB6
RB7
spare in/out
22p
4MHz
16F84
RB4
RB5
RB6
RB7
+V
OSC2
OSC1
RB2
RB1
RB0
GND
MCLR
RA0
3 x 470
100p
PMB2306
EN
DA
CK
MOD
PD
IN
LED
470
BC817
PI attenuator
6 dB R1=R3=150, R2=39
10 dB R1=R3=100, R2=68
13 dB R1=R3=82, R2=100
16 dB R1=R3=68, R2=150
* Not mount
** Values depending on reference frequency
*** Option if Loop error synth reload is used, not implemented in SW
All resistors size 0805
FQ locked VCXO
Rev G
1(1)
SM6PGP20001001